FOYOT

知识产权声明:
本设计的结构和技术参数的知识产权归:
浙江森锋电子科技有限公司 所有,在未经
本公司书面许可,不得复制,转让或仿制.
如经发现被复制或仿制将受到法律的严惩.

因改良等原因，规格以及外观有所变更时，不再另行通知，敬请谅解。
Without further notice if specification and exterior have been changed because of improvement thanks for your understanding

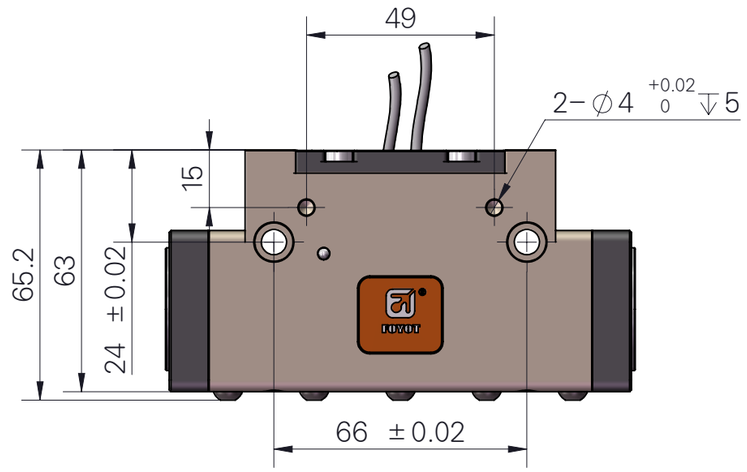

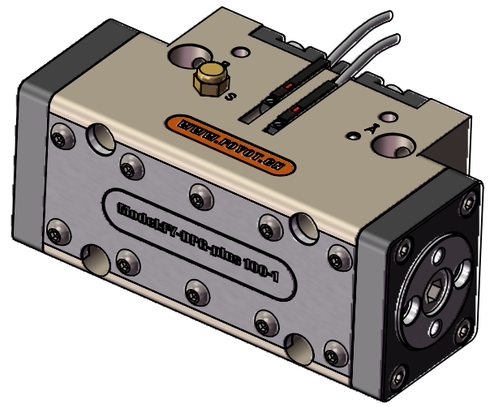

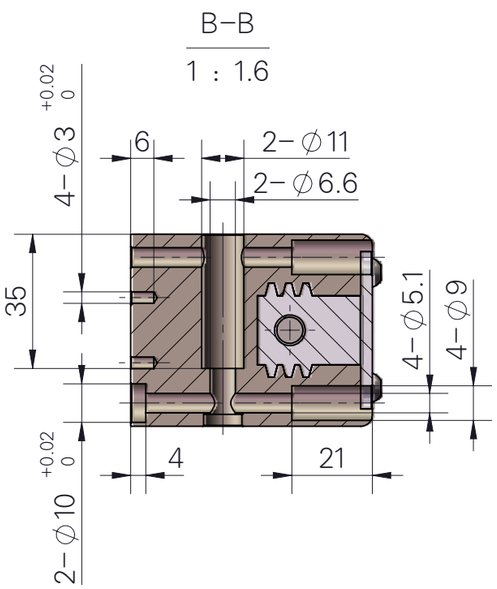

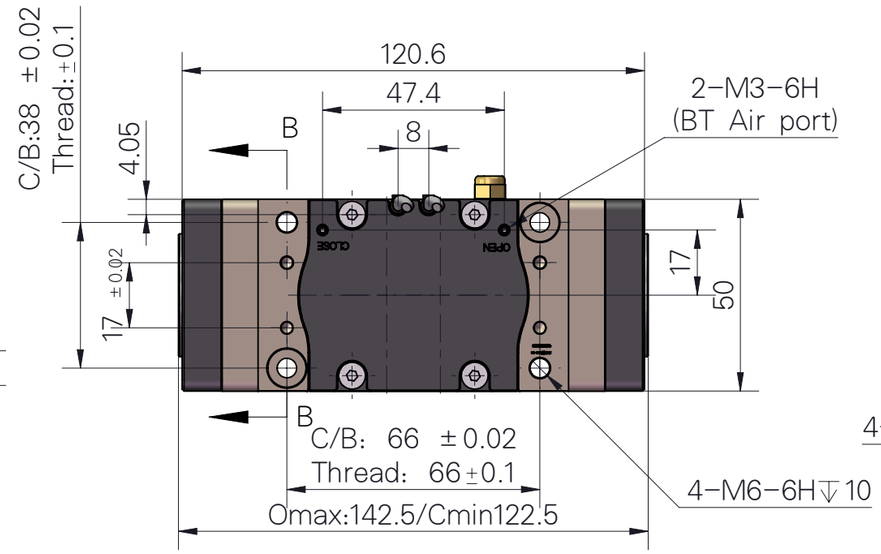

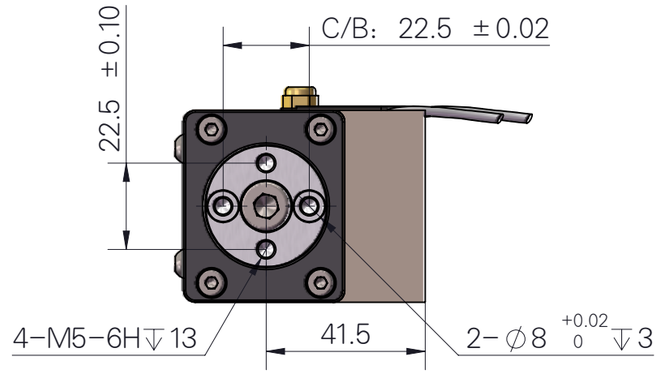

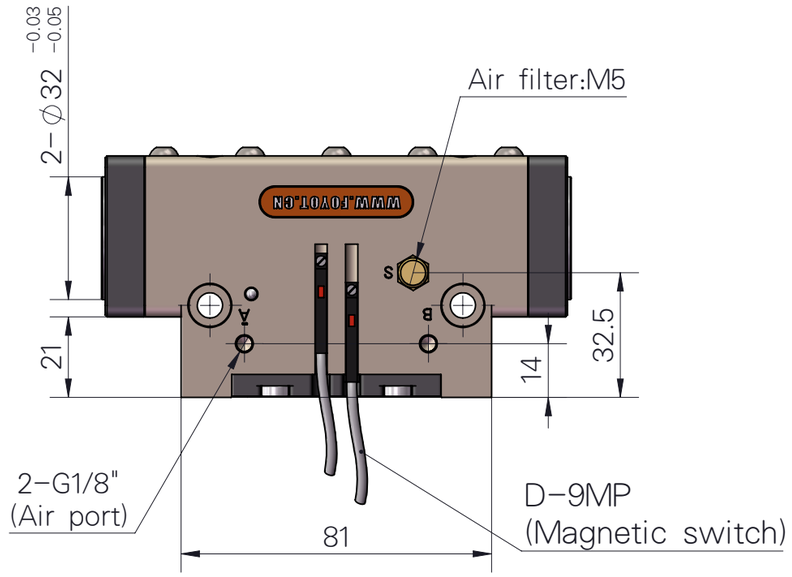

警告:

1.当操作夹爪工作时，请人员务必远离夹爪和机器人的活动部位，否则将会造成人身伤害的险;

2.由于不同物件有其不同的摩擦系数，当初次夹持工件时，请在空旷场地进行试夹，确保夹稳固后方可装机工作，否则将会有跌落工件砸伤机器或人员的风险

Warning:

1.When operating the gripper, please keep away from it Gripper and robot's moving parts, otherwise it will Risk of personal injury;

2. Because different objects have different friction coefficients, When clamping the workpiece for the first time, please try clamping in an open field. Ensure that the clamping is firm before the machine can work, otherwise it will There is a risk that falling workpieces may damage machines or personnel.

名称：气动全密封平行两爪

Name: Pneumatic full seal parallel two claws

型号（Model）：FY-DPG-Plus 100-1

P:空气压力（bar）P:Air Pressure(bar)

L:到作用点距离（mm）L:Exertion Length(mm)

开闭范围（Stoke）:20mm

产品重量（Weight):1.3kg

最大附件长度(Max. length attach):100cm

配管连接口(Fitting size):PF(G)1/8

理论夹持力-开(Gripping force :Open):789.74N

理论夹持力-闭(Gripping force : Close):693.56N

单循环空气消耗量(Air consumption per cycle):30.7cm³

开闭时间(Closeing/Opening time):0.04/0.04sec

重复精度Repeat accuracy):0.02mm

连续使用次数(Continuation usage amount):50

使用气压(Operating pressure):3-8bar

周围温度(Ambient temperature): -5 to 60℃(-10 to 130℃)

润滑(Lubrication):不需要（Needless）

根据IEC60529标准安全防护:IP64

Safety protection according to IEC60529 standard:IP64

所有数据在7Bar时测量(All data were measured at 7 Bar)

重复精度：连续动作100次以后的检测值

After 100 consecutive strokes to end positions